SINK SPECIFICATIONS

Premium Series

BLANCONORSTAR™ LARGE EQUAL DOUBLE BOWL Undermount

Model 513-612

BLANCO

FEATURED MODEL

513-612 8" & 8" bowl depths

FEATURES

- 18 gauge, 304 series stainless steel
- 18/10 chrome/nickel content
- Easy-to-clean, Silver Ease™ matte finish
- Rear drain placement

CODE/STANDARDS COMPLIANCE

ASME 112.19.3-00
IAPMO/UPC listed

OPTIONAL ACCESSORIES

Sink Grid: 510-902
Colanders: 215-651

WARRANTY

Blanco America's BLANCONORSTAR™ sinks feature a "NO HASSLE" LIMITED LIFETIME WARRANTY to be free of all manufacturing defects under normal use. See our complete warranty for details.

While Blanco America endeavors to provide accurate information, all dimensions are nominal, cannot be guaranteed, and are subject to change or cancellation. Blanco America assumes no responsibility for use of superseded or voided specifications.

PRODUCT SPECIFICATION

Undermount sink to be equal double bowl design, 32" in length and 20-7/8" in front-to-back depth. Sink to be made from 18 gauge, 304 series stainless steel, with 18/10 chrome/nickel content and Silver Ease™ matte finish. Sink to feature rear drain placement. Sink to be Blanco Model 513-612, with left bowl depth of 8" and right bowl depth of 8".

MODEL 513-612

NOMINAL DIMENSIONS

MODEL	OVERALL	CUTOUT SIZE	BOWL DEPTH LEFT	BOWL DEPTH RIGHT	DRAIN DIAMETER
513-612	32 x 20-7/8	Template provided with approximate 1/8" reveal	8	8	3-1/2

DXF cutout templates available on our web site or this specification CD.

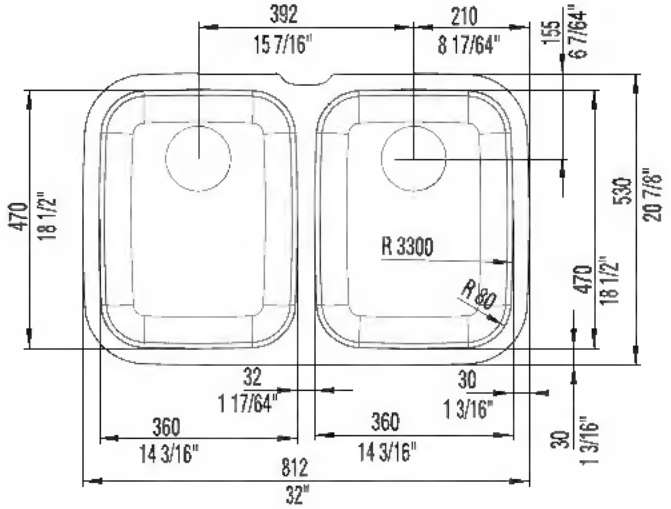

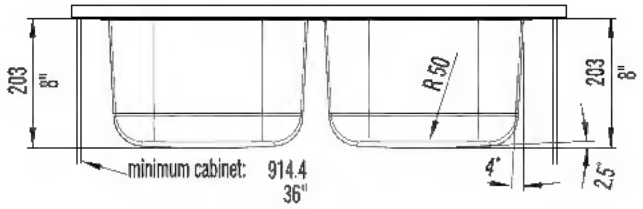

JOB INFORMATION

Job Name: _____

Contact: _____

Date Specified: _____

Specifier: _____

Contractor: _____

BLANCO AMERICA
800.451.5782
www.blancoamerica.com

© 2006 BLANCO AMERICA